ANTIBACTERIAL S/STEEL HANDICAPPED GRAB BAR

COMPLY WITH JIS Z 2801:2000

TYPE A/B ABGB

TYPE D ABUGB750200

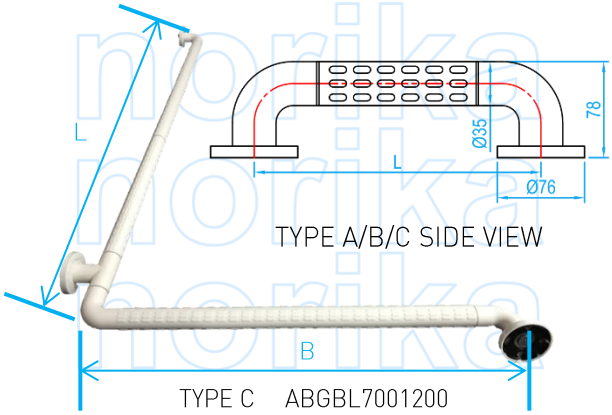

TYPE A/B/C SIDE VIEW

TYPE C ABGBL7001200

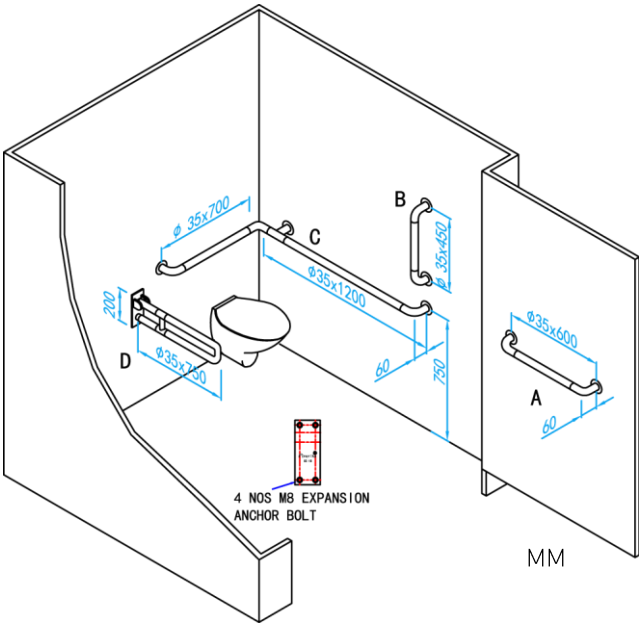

MM

* Length could be customized.

STANDARD SPECIFICATIONS

SKU	MATERIAL	L (mm)	PIPE DIAMETER (mm)	WEIGHT (kg)	PCS/CTN
ABGB0250	AISI304 & NYLON	250	Ø35	0.60	20
ABGB0300	AISI304 & NYLON	300	Ø35	0.65	20
ABGB0350	AISI304 & NYLON	350	Ø35	0.72	20
ABGB0400	AISI304 & NYLON	400	Ø35	0.78	20
ABGB0450	AISI304 & NYLON	450	Ø35	0.82	20
ABGB0600	AISI304 & NYLON	600	Ø35	1.10	15
ABGB0650	AISI304 & NYLON	650	Ø35	1.15	15
ABGB0750	AISI304 & NYLON	750	Ø35	1.22	10
ABGB0900	AISI304 & NYLON	900	Ø35	1.40	10
ABGB1000	AISI304 & NYLON	1000	Ø35	1.70	10
ABGBL07500600	AISI304 & NYLON	750 (L) x600 (B)	Ø35	2.55	6
ABGBL07500650	AISI304 & NYLON	750 (L) x650 (B)	Ø35	2.60	6
ABGBL08500750	AISI304 & NYLON	850 (L) x750 (B)	Ø35	2.80	6
ABGBL10500600	AISI304 & NYLON	1050 (L) x600 (B)	Ø35	2.85	6
ABGBL07001200	AISI304 & NYLON	1200 (L) x700 (B)	Ø35	3.10	6
ABUGB750200	AISI304 & NYLON	750 (L) x 126 (B)	Ø35	2.90	5

Copyright. All Rights Reserve. Norika®
Norika is constantly seeking product improvements. Therefore, its products are subject to change if deemed necessary.